PVC HORIZONTAL BENDS AND VERTICAL UP BENDS

RESTRAINED JOINT LENGTH L (MINIMUM DISTANCE IN FEET FROM FITTING – EACH WAY)

PIPE SIZE (IN.)	BENDS 90°	45°	22.5°	11.25°	CROSS WITH PLUG / DEAD END / TEE/WYE
6	26	11	6	3	53
8	33	14	7	4	68
12	46	19	10	5	96

PVC VERTICAL DOWN BEND

RESTRAINED JOINT LENGTH L (MINIMUM DISTANCE IN FEET FROM FITTING – EACH WAY)

PIPE SIZE (IN.)	BENDS 90°	45°	22.5°	11.25°
6	26	11	6	3
8	33	14	7	4
12	46	19	10	5

DIP HORIZONTAL BENDS AND VERTICAL UP BENDS

RESTRAINED JOINT LENGTH L (MINIMUM DISTANCE IN FEET FROM FITTING – EACH WAY)

PIPE SIZE (IN.)	BENDS 90°	45°	22.5°	11.25°	CROSS WITH PLUG / DEAD END / TEE/WYE
12"	68	28	14	7	144
24"	119	49	24	12	258

DIP VERTICAL DOWN BEND

RESTRAINED JOINT LENGTH L (MINIMUM DISTANCE IN FEET FROM FITTING – EACH WAY)

PIPE SIZE (IN.)	BENDS 90°	45°	22.5°	11.25°
12"	144	60	29	14
24"	258	107	51	25

RESTRAINED JOINT INFORMATION

ENGINEERING STANDARDS 2022

REVISIONS | BY | DATE — ENGINEERING DIVISION, CITY OF POMPANO BEACH — RESTRAINED JOINT INFORMATION — SCALE: N.T.S. — DATE: MAY 2022 — DWG. NO. 118-2

MIN. LENGTH OF PIPE (FEET) TO BE RESTRAINED
(SOURCES: EBAA IRON RESTRAINT LENGTH CALCULATION PROGRAM FOR PVC PIPE, RELEASE 3.1. AND DIPRA THRUST RESTRAINT FOR DUCTILE IRON PIPE, RELEASE 3.2)

FITTING TYPE		PIPE SIZE 4"	6"	8"	10"	12"	16"	20"	24"	200psi 30"	36"	42"	48"
90° HORIZ. BEND		14	20	25	30	35	45	54	62	98	112	124	135
45° HORIZ. BEND		6	8	11	13	15	19	22	26	41	46	51	56
22.5° HORIZ. BEND		3	4	5	6	7	9	11	12	19	22	25	27
11.25° HORIZ. BEND		1	2	3	3	4	4	5	6	10	11	12	13
90° VERT. OFFSET	UPPER BEND	29	41	53	64	74	95	115	134	214	246	276	304
	LOWER BEND	7	10	13	16	19	25	30	35	57	66	74	83
45° VERT. OFFSET	UPPER BEND	12	19	24	29	34	39	48	56	89	102	114	126
	LOWER BEND	3	4	6	7	8	10	12	15	23	27	31	34
22.5° VERT. OFFSET	UPPER BEND	6	9	12	14	17	19	23	27	43	49	55	60
	LOWER BEND	1	2	4	4	4	5	6	7	11	13	15	16
11.25° VERT. OFFSET	UPPER BEND	3	4	6	7	8	9	11	13	21	24	27	30
	LOWER BEND	1	1	1	2	2	2	3	3	6	6	7	8
PLUG (DEAD END)		32	45	59	70	83	107	129	151	214	246	276	304
IN-LINE VALVE		32	45	45	45	45	56	65	80	110	125	140	155
TEE (BRANCH RESTRAINT)	4"x Ø	23	–	–	–	–	–	–	–	–	–	–	–
	6"x Ø	21	35	–	–	–	–	–	–	–	–	–	–
	8"x Ø	18	34	47	–	–	–	–	–	–	–	–	–
	10"x Ø	16	32	46	58	–	–	–	–	–	–	–	–
	12"x Ø	13	30	44	57	69	–	–	–	–	–	–	–
	16"x Ø	7	26	41	55	67	90	–	–	–	–	–	–
	20"x Ø	1	21	38	52	65	88	109	–	–	–	–	–
	24"x Ø	1	16	34	49	62	86	108	129	–	–	–	–
	30"x Ø	1	8	28	44	58	83	106	127	208	–	–	–
	36"x Ø	1	1	22	39	54	80	103	124	206	240	–	–
	42"x Ø	1	1	15	33	49	77	100	122	205	239	270	–
	48"x Ø	1	1	7	27	44	73	97	120	203	238	269	298
REDUCER (LARGER PIPE RESTRAINT)	6"x Ø	23	–	–	–	–	–	–	–	–	–	–	–
	8"x Ø	38	25	–	–	–	–	–	–	–	–	–	–
	10"x Ø	57	43	24	–	–	–	–	–	–	–	–	–
	12"x Ø	72	60	44	41	–	–	–	–	–	–	–	–
	16"x Ø	99	90	78	75	45	–	–	–	–	–	–	–
	20"x Ø	123	116	107	105	81	45	–	–	–	–	–	–
	24"x Ø	146	140	132	131	111	82	45	–	–	–	–	–
200psi	30"x Ø	209	204	197	188	177	153	116	75	–	–	–	–
	36"x Ø	243	236	233	226	217	196	168	135	74	–	–	–
	42"x Ø	273	270	265	259	252	234	211	183	133	72	–	–
	48"x Ø	301	298	294	289	283	268	249	226	183	131	71	–

NOTES:
1. THE DATA IN THE ABOVE TABLE ARE BASED UPON THE FOLLOWING INSTALLATION CONDITIONS:
   SOIL TYPE–SAND; TEST PRESSURE–150 PSI/200 PSI; DEPTH OF BURY–3'
   TRENCH TYPE–3; SAFETY FACTOR–1.5; VERTICAL OFFSET–3'
   MINIMUM PIPE LENGTH ALONG TEE RUN–5'
2. THE RESTRAINED PIPE LENGTHS APPLY TO DUCTILE IRON AND PVC PIPE.
3. ALL JOINTS BETWEEN UPPER AND LOWER BENDS SHALL BE RESTRAINED.
4. RESTRAINED PIPE LENGTHS APPLY TO PIPE ON BOTH SIDES OF VALVES AND FITTINGS.

RESTRAINED JOINT INFORMATION

ENGINEERING STANDARDS 2022

REVISIONS | BY | DATE — ENGINEERING DIVISION, CITY OF POMPANO BEACH — RESTRAINED JOINT INFORMATION — SCALE: N.T.S. — DATE: MAY 2022 — DWG. NO. 118-3

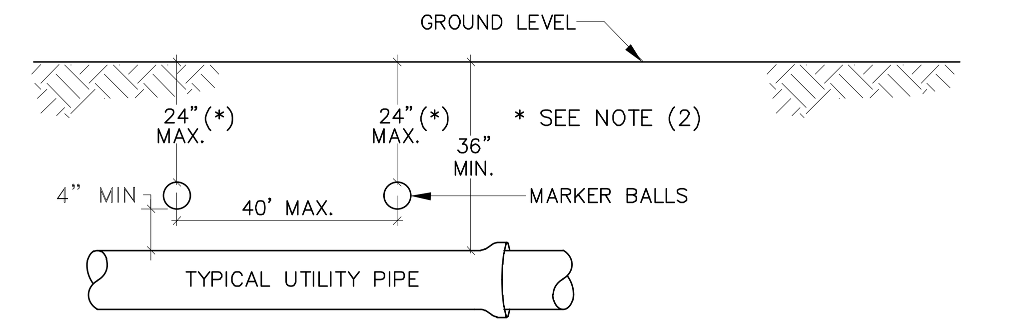

GENERAL NOTES:

1. ALL UTILITY PIPE SHALL BE INSTALLED WITH 4"ø MARKING BALLS PLACED EVERY 40' AND AT EVERY FITTING, FOR IDENTIFICATION AND WARNING PURPOSES, BURIED ABOVE THE PIPE AT A MAXIMUM DEPTH OF 24 INCHES OR AS APPROVED BY THE OWNER. IT SHALL BE COLOR CODED AND WORDED AS FOLLOWS:

   POTABLE WATER.
   A. COLOR: BLUE PER 62–555.320(21)(b)(3) F.A.C.
   B. LETTERING: WATER
   C. FREQUENCY OF MARKER BALLS SHALL BE 145.7 Khz.
   D. THE MARKER BALLS CAN BE BURIED IN ANY ORIENTATION.

   THE MARKER BALLS SHALL BE DETECTABLE BY STANDARD METAL DETECTION EQUIPMENT AND SHALL BE MANUFACTURED BY TEMPO OR 3M LOCATOR SYSTEM OR EQUIVALENT (FREQUENCY 145.7 Khz)

2. FOR LARGE DIAMETER PIPE INSTALLED AT DEPTHS BELOW 4'–0" MARKER BALLS SHALL BE PLACED AT A MAXIMUM DEPTH OF 4'–0" BELOW GRADE *.

WATER PIPE IDENTIFICATION

ENGINEERING STANDARDS 2022

REVISIONS | BY | DATE: S.S. 01/12; S.S. 06/16 — ENGINEERING DIVISION, CITY OF POMPANO BEACH — WATER PIPE IDENTIFICATION — SCALE: N.T.S. — DATE: JAN. 2022 — DWG. NO. 119-1

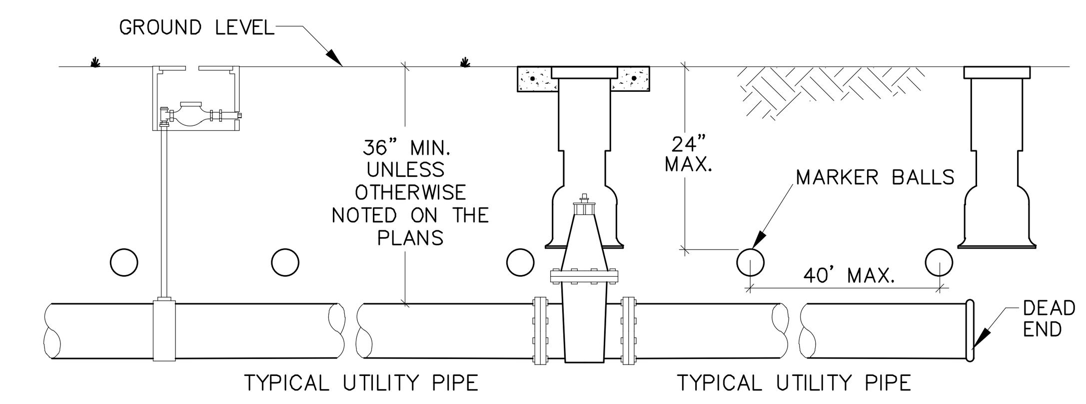

GENERAL NOTES:

1. ALL NONMETALLIC PIPE SHALL BE INSTALLED WITH 12 THHN SOLID COPPER TRACING WIRE.
2. THE MARKER BALLS MUST BE INSTALLED DIRECTLY ABOVE THE PIPE.
3. MARKER BALLS SHALL BE INSTALLED AT 40' O.C.
4. BALL COLOR CODING:
   POTABLE WATER SYSTEM: BLUE PER 62–555.320(21)(b)(3) F.A.C.

UTILITY PIPE AND MARKER BALLS LOCATION

ENGINEERING STANDARDS 2022

REVISIONS | BY | DATE: S.S. 01/12; S.S. 06/16 — ENGINEERING DIVISION, CITY OF POMPANO BEACH — UTILITY PIPE AND MARKER BALLS LOCATION — SCALE: N.T.S. — DATE: JAN. 2022 — DWG. NO. 120-1

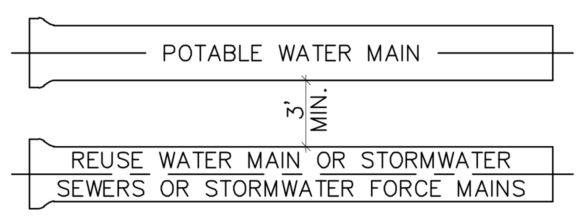

A MINIMUM HORIZONTAL SEPARATION 3' (OUTSIDE TO OUTSIDE), SHALL BE MAINTAINED BETWEEN POTABLE WATER MAINS AND STORMWATER SEWERS, STORMWATER FORCE MAINS AND REGULATED REUSE WATER MAINS.

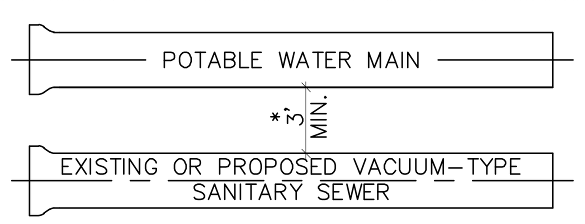

A MINIMUM HORIZONTAL SEPARATION 3' (OUTSIDE TO OUTSIDE), SHALL BE MAINTAINED BETWEEN EXISTING OR PROPOSED VACUUM–TYPE SANITARY SEWER. * SEE NOTE D(1)(B).

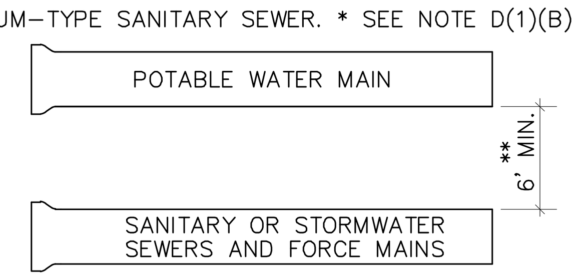

A MINIMUM HORIZONTAL SEPARATION OF 6' (OUTSIDE TO OUTSIDE), SHALL BE MAINTAINED BETWEEN POTABLE WATER MAINS AND EXISTING OR PROPOSED GRAVITY–OR PRESSURE TYPE SANITARY SEWER, WASTEWATER FORCE MAIN OR NOT REGULATED REUSE WATER MAIN. ** SEE NOTE D(1)(C).

MINIMUM HORIZONTAL SEPARATION REQUIREMENTS FOR POTABLE WATER, REUSE, STORMWATER AND SEWER LINES

ENGINEERING STANDARDS 2022

REVISIONS | BY | DATE: S.S. 01/12 — ENGINEERING DIVISION, CITY OF POMPANO BEACH — MIN. HORIZONTAL SEPARATION FOR POTABLE WATER — SCALE: N.T.S. — DATE: JAN. 2022 — DWG. NO. 121-1

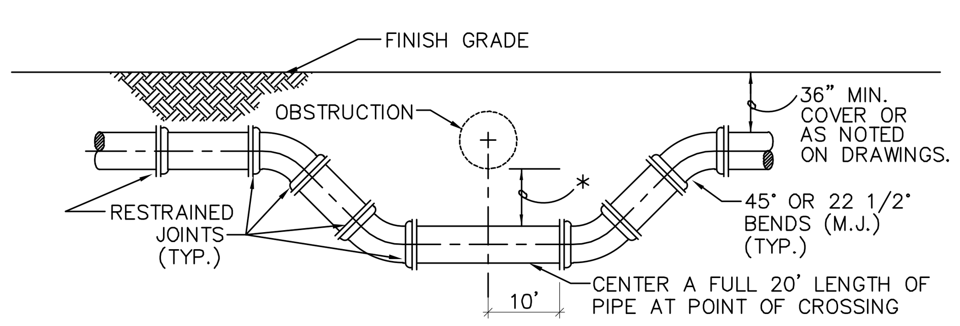

SPECIAL UTILITY CROSSING – FITTING TYPE

* 12" MINIMUM CLEARANCE REQUIRED FOR PRESSURE TYPE SANITARY SEWER, WASTEWATER OR STORMWATER FORCE MAIN OR REUSE WATER MAIN CROSSINGS. IF MINIMUM CLEARANCE CANNOT BE OBTAINED. REFER TO "PROTECTION OF POTABLE WATER SUPPLY" FOR WATER MAIN CROSSINGS. SEE NOTE 2(B), ON STANDARD NO. 122–3

6" MINIMUM CLEARANCE REQUIRED FOR WATER AND STORMWATER, SEWER MAIN CROSSINGS. SEE NOTE 2(A), ON STANDARD NO. 122–3.

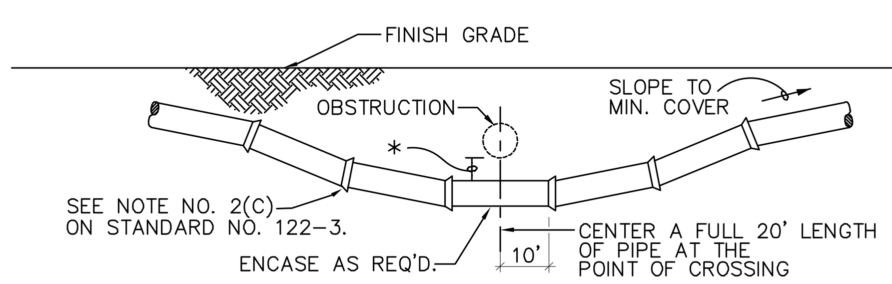

STANDARD UTILITY CROSSING – DEFLECTION TYPE

NOTES:
1. THE DEFLECTION TYPE CROSSING SHALL BE USED WHEREVER POSSIBLE. ONLY UNDER SPECIFIC ORDERS BY THE ENGINEER SHALL THE FITTING TYPE CROSSING BE ALLOWED.
2. CONSTRUCT STANDARD CROSSING USING NO MORE THAN 75% OF MANUFACTURERS' MAXIMUM JOINT DEFLECTION.
3. FOR POTABLE WATER MAINS, REFER TO "PROTECTION OF POTABLE WATER SUPPLY".

UTILITY CROSSINGS

ENGINEERING STANDARDS 2022

REVISIONS | BY | DATE: S.S. 01/12 — ENGINEERING DIVISION, CITY OF POMPANO BEACH — UTILITY CROSSINGS — SCALE: N.T.S. — DATE: JAN. 2022 — DWG. NO. 122-1

PROTECTION OF POTABLE WATER SUPPLY NOTES

A. GENERAL
IN ADDITION TO THESE REQUIREMENTS, ALL POTABLE WATER MAINS CONSTRUCTED IN THE VICINITY OF STORM SEWERS, SANITARY SEWERS OR FORCE MAINS SHALL COMPLY WITH THE APPLICABLE PROVISIONS OF FLORIDA ADMINISTRATIVE CODE CHAPTER 62–555, GREAT LAKES–UPPER MISSISSIPPI RIVER BOARD OF STATE SANITARY ENGINEERS (GLUMRB) "RECOMMENDED STANDARDS FOR WATER WORKS", AND GLUMRB "RECOMMENDED STANDARDS FOR WASTEWATER FACILITIES".

B. DEFINITIONS
FOR THE PURPOSES OF THIS SPECIFICATION, THE WORDS "OTHER PIPE" OR "OTHER PIPES" SHALL MEAN SANITARY SEWER MAIN, SEWAGE FORCE MAIN, STORMWATER MAIN OR ANY COMBINATION THEREOF.

C. CROSS CONNECTIONS PROHIBITED
THERE SHALL BE NO PHYSICAL CONNECTIONS BETWEEN A PUBLIC OR PRIVATE POTABLE WATER SUPPLY SYSTEM AND ANY OTHER PIPE OR APPURTENANCE THERETO WHICH WOULD PERMIT THE PASSAGE OF ANY WASTEWATER, POLLUTED WATER, OR ANY OTHER WATER INTO THE POTABLE SUPPLY. NO WATER PIPE SHALL PASS THROUGH OR COME INTO CONTACT WITH ANY PART OF A SANITARY SEWER MANHOLE OR STORMWATER MANHOLE.

D. RELATION OF OTHER PIPES TO POTABLE WATER MAINS

1. HORIZONTAL SEPARATION
   A. NEW OR RELOCATED, UNDERGROUND WATER MAINS SHALL BE LAID TO PROVIDE A HORIZONTAL DISTANCE OF AT LEAST THREE FEET BETWEEN THE OUTSIDE OF THE WATER MAIN AND THE OUTSIDE OF ANY EXISTING OR PROPOSED STORM WATER, STORM WATER FORCE MAIN, OR PIPELINE CONVEYING REUSE WATER NOT REGULATED UNDER PART III OF CHAPTER 62–610,F.A.C.
   B. NEW OR RELOCATED, UNDERGROUND WATER MAINS SHALL BE LAID TO PROVIDE A HORIZONTAL DISTANCE OF AT LEAST THREE FEET, AND PREFERABLY TEN FEET, BETWEEN THE OUTSIDE OF THE WATER MAIN AND THE OUTSIDE OF ANY EXISTING OR PROPOSED VACUUM–TYPE SANITARY SEWER.
   C. NEW OR RELOCATED, UNDERGROUND WATER MAINS SHALL BE LAID TO PROVIDE A HORIZONTAL DISTANCE OF AT LEAST SIX FEET, AND PREFERABLY TEN FEET, BETWEEN THE OUTSIDE OF THE WATER MAIN AND THE OUTSIDE OF ANY EXISTING OR PROPOSED GRAVITY–OR PRESSURE–TYPE SANITARY SEWER, WASTEWATER FORCE MAIN, OR PIPELINE CONVEYING REUSE WATER NOT REGULATED UNDER CHAPTER 62–610, F.A.C. THE MINIMUM HORIZONTAL SEPARATION DISTANCE BETWEEN WATER MAINS AND GRAVITY TYPE SEWERS SHALL BE REDUCED TO THREE FEET WHERE THE BOTTOM OF THE WATER IS LAID AT LEAST SIX INCHES ABOVE THE TOP OF THE SEWER.

ENGINEERING STANDARDS 2022

REVISIONS | BY | DATE: S.S. 01/12 — ENGINEERING DIVISION, CITY OF POMPANO BEACH — POTABLE WATER SUPPLY NOTES — SCALE: N.T.S. — DATE: JAN. 2022 — DWG. NO. 122-2

   D. NEW OR RELOCATED, UNDERGROUND WATER MAINS SHALL BE LAID TO PROVIDE A HORIZONTAL DISTANCE OF AT LEAST TEN FEET BETWEEN THE OUTSIDE OF THE WATER MAIN AND ALL PARTS OF ANY EXISTING OR PROPOSED "ON–SITE SEWAGE TREATMENT AND DISPOSAL SYSTEM".

2. VERTICAL SEPARATION
   A. NEW OR RELOCATED, UNDERGROUND WATER MAINS CROSSING ANY EXISTING OR PROPOSED GRAVITY–OR VACUUM–TYPE SANITARY SEWER OR STORM SEWER SHALL BE LAID SO THE OUTSIDE OF THE WATER MAIN IS AT LEAST SIX INCHES, AND PREFERABLY 12 INCHES, ABOVE OR AT LEAST 12 INCHES BELOW THE OUTSIDE OF THE OTHER PIPELINE. HOWEVER, IT IS PREFERABLE TO LAY THE WATER MAIN ABOVE THE OTHER PIPELINE.
   B. NEW OR RELOCATED, UNDERGROUND WATER MAINS CROSSING ANY EXISTING OR PROPOSED PRESSURE–TYPE SANITARY SEWER, WASTEWATER OR STORM WATER FORCE MAIN, OR PIPELINE CONVEYING REUSE WATER SHALL BE LAID SO THE OUTSIDE OF THE WATER MAIN IS AT LEAST 12 INCHES, ABOVE OR BELOW THE OUTSIDE THE OTHER PIPELINE. HOWEVER, IT IS PREFERABLE TO LAY THE WATER MAIN ABOVE THE OTHER PIPELINE.
   C. AT THE UTILITY CROSSINGS DESCRIBED IN PARAGRAPHS (A) AND (B) ABOVE, ONE FULL LENGTH OF WATER MAIN PIPE SHALL BE CENTERED ABOVE OR BELOW THE OTHER PIPELINE SO THE WATER MAIN JOINTS WILL BE AS FAR AS POSSIBLE FROM THE OTHER PIPELINE. ALTERNATIVELY, AT SUCH CROSSINGS, THE PIPES SHALL BE ARRANGED SO THAT ALL WATER MAIN JOINTS ARE AT LEAST THREE FEET FROM ALL JOINTS IN VACUUM–TYPE SANITARY SEWERS, STORM SEWERS, STORM WATER FORCE MAINS, OR PIPELINES CONVEYING REUSE WATER REGULATED UNDER PART III OF CHAPTER 62–610, F.A.C. AND AT LEAST SIX FEET FROM ALL JOINTS IN GRAVITY– OR PRESSURE–TYPE SANITARY SEWERS, WASTEWATER FORCE MAINS, OR PIPELINES CONVEYING REUSE WATER NOT REGULATED UNDER PART III OR CHAPTER 62–610, F.A.C.

   WHERE THE HORIZONTAL CAN BEING LOCATED LESS THAT THE REQUIRED MINIMUM DISTANCES FROM JOINTS IN THE OTHER PIPELINE OR THE HORIZONTAL IS LESS THAT THREE FEET FROM ANOTHER PIPELINE OR THE UNDER GROUND WATER MAIN IS CROSSING ANOTHER PIPELINE AND IS LESS THAN THE REQUIRED MINIMUM VERTICAL DISTANCE FROM THE OTHER PIPELINE, THE CONTRACTOR SHALL CONTACT THE ENGINEER IMMEDIATELY FOR RECOMMENDED SOLUTIONS TO MEET THE FLORIDA OF DEPARTMENT OF ENVIRONMENTAL PROTECTION REQUIREMENTS PER CHAPTER 62–555, F.A.C.

PROTECTION OF POTABLE WATER SUPPLY NOTES

ENGINEERING STANDARDS 2022

REVISIONS | BY | DATE: S.S. 01/12 — ENGINEERING DIVISION, CITY OF POMPANO BEACH — POTABLE WATER SUPPLY NOTES — SCALE: N.T.S. — DATE: JAN. 2022 — DWG. NO. 122-3

KEITH
301 East Atlantic Blvd.
Pompano Beach, FL 33060
PH: (954) 788-3400
Florida Engineering Business License: CA7928
Florida Surveyor and Mapper Business License: LB6860
Florida Landscape Architecture Business License: LC26000457

REVISIONS NO.	DESCRIPTION	DATE

PRELIMINARY PLAN NOT FOR CONSTRUCTION
THESE PLANS ARE NOT FULLY PERMITTED AND ARE SUBJECT TO REVISIONS MADE DURING THE PERMITTING PROCESS.
RESPONSIBILITY FOR THE USE OF THESE PLANS PRIOR TO OBTAINING PERMITS FROM ALL AGENCIES HAVING JURISDICTION OVER THE PROJECT WILL FALL SOLELY UPON THE USER.

ISSUE DATE: 10/11/2023
DESIGNED BY: NW
DRAWN BY: JL
CHECKED BY: NW
BID-CONTRACT:

This item has been digitally signed and sealed by NILES T. WARRICK, P.E. on the date adjacent to the seal.
NILES T. WARRICK LICENSE No. 94320 STATE OF FLORIDA PROFESSIONAL ENGINEER
Printed copies of this document are not considered signed and sealed and the signature must be verified on any electronic copies.
2023.10.11 10:40:38-04'00'
NILES T. WARRICK, P.E.
FLORIDA REG. NO. 94320
(FOR THE FIRM)

CLIENT
YURI GURFEL

PROJECT
911 E. ATLANTIC BLVD. MULTIFAMILY
Pompano Beach, FL

SHEET TITLE
WATER AND SEWER DETAILS

SHEET NUMBER CU-503
PROJECT NUMBER 13376.01

STATUS: PRELIMINARY

Plotted by: dillingworth On 10/11/2023 9:06 AM
Drawing name: K:\13376.01 - 911 East Atlantic Blvd. Multifamily - Yuri Gurfel\Engineering\Cadd\13376.01-CU-5XX.dwg

P&Z
PZ23-12000043
05/22/2024